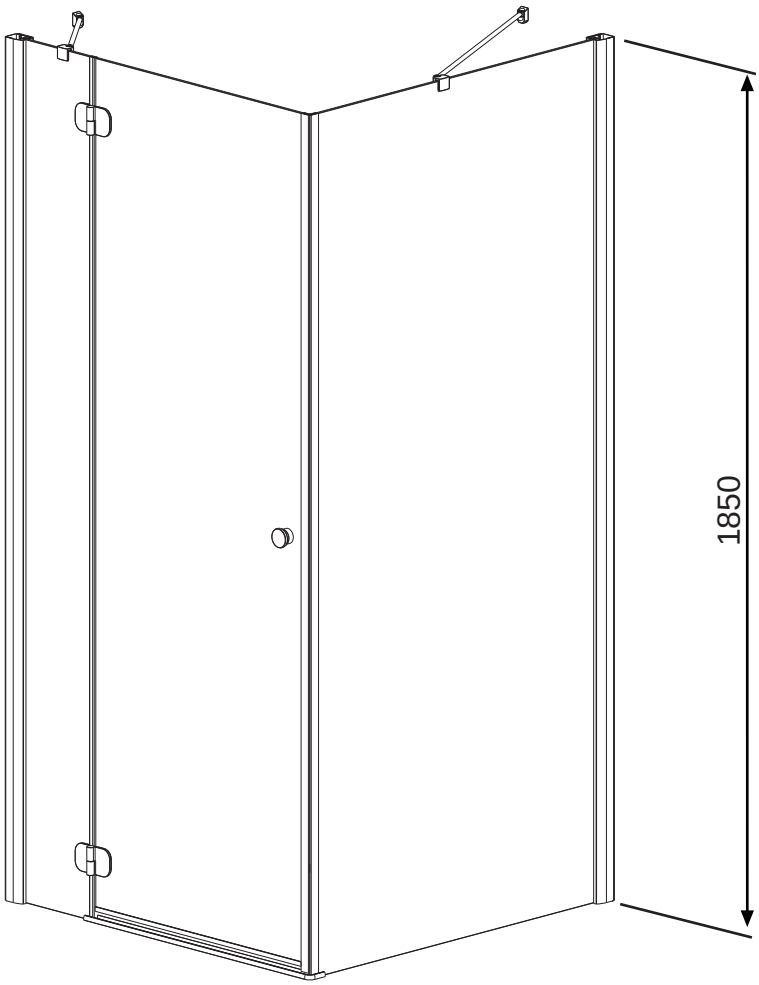
1850

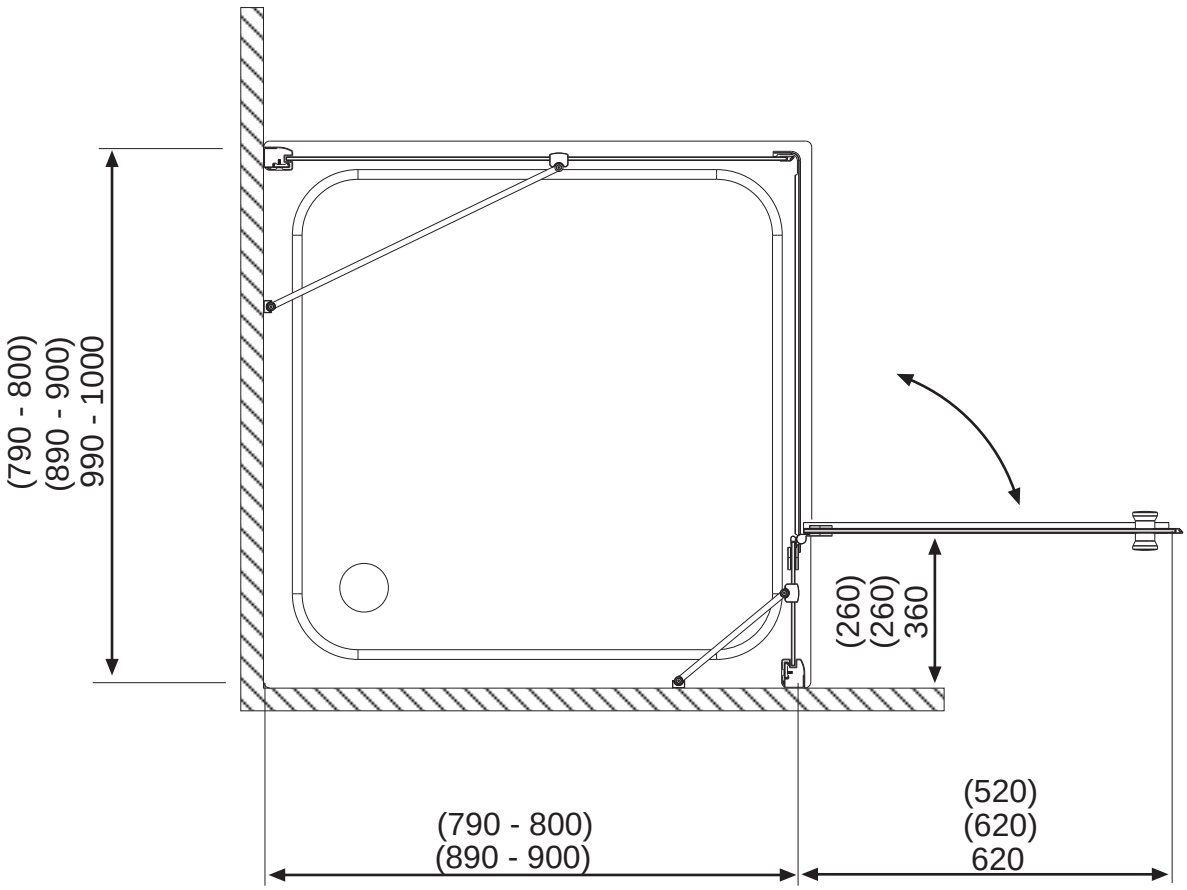
(790 - 800)
(890 - 900)
990 - 1000
(260)
(260)
360
(790 - 800)
(890 - 900)
(520)
(620)
620